Industrial RS-232 to RS-422/485 Converter

485DRCi

B+B SmartWorx Powered by Advantech

PRODUCT FEATURES

- Data rates up to 115.2 kbps
- Three-way 2,000V optical isolation (input, output, power)
- Wide (-40 to +80 °C) operating temperature
- UL Class 1/Division 2
- Modbus ASCII/RTU, Allen-Bradley® DH-485 compatible
- 10–48 VDC input power range

Model 485DRCi industrial-grade isolated serial converter changes RS-232 signals to RS-422 for increased range, or to RS-485 for increased range plus multi-drop capability.

Designed for rugged industrial use, the 485DRCi is UL approved and certified for operation in Class 1/Division 2 environments and also offers 2,000V 3-way optical isolation on input, output, and power lines. In addition to optical isolation, the unit has surge suppression on the RS-422/485 lines. This DIN rail mountable converter optically isolates and converts unbalanced, full or half-duplex, RS-232 signals to balanced RS-422/485 signals at baud rates up to 115.2 kbps. Configuration is made via a 12-position DIP switch on the bottom of the converter.

Featuring Automatic Send Data Control circuitry, the converter does not require special software control of handshake signals in RS-485 mode. Removable terminal blocks for power and RS-422/485 signals make wiring easy. It is powered by a supply voltage of 10 to 48 VDC which is isolated from all data and signal ground lines. The 485DRCi may be suitable for use in Modbus and Allen-Bradley® DH-485 applications.

IN THE FIELD

Resolving Electrical Substation Data Glitches

Industry: Energy & Natural Resources Utilities

Product: Optically Isolated Converter

ORDERING INFORMATION

MODEL NUMBER	RS-232 CONNECTOR	RS-422/485 CONNECTOR	ISOLATION
485DRCi	DB9 Female (DCE)	Removable Terminal Block	2,000 V

ACCESSORIES

MDR-20-24 - DIN rail mount power supply 24VDC, 1.0 A output power

EK-CLIP-MPC - Replacement DIN Rail Clip

TBKT1 - Replacement Terminal Block, 2 position 5.08mm

TBKT2 - Replacement Terminal Block, 5 position 5.08mm

31D1-28100 - Null Modem Adapter (Allen-Bradley® applications)

Automatic Send Data Control Explained

As operating systems become more complex, it is increasingly difficult to control an RS-485 driver with standard software and the RTS line. This is especially true in Windows and multi-tasking operating systems. With B+B SmartWorx' Automatic Send Data Control circuit, driver control is in the converter hardware, so you do not have to work with software at all.

The circuit monitors data flow and enables the driver during transmission and automatically disables it when no data is being sent. There is no need to rework software or install new drivers. Most B+B SmartWorx RS-232 to RS-485 converters and RS-485 serial cards include Automatic Send Data Control.

Allen-Bradley® 1761-NET-AIC

The 485DRCi can be used as a replacement for the Allen-Bradley® Advanced Interface Converter (AIC+) in some applications. The 31D1-28100 null modem adapter accessory is required for these applications. Contact B+B SmartWorx Technical Support for assistance regarding your specific installation needs. A White Paper is also available at the B+B SmartWorx online technical library.

Some logos, names and words are trademarks of their respective owners.
All product specifications are subject to change without notice.

Industrial RS-232 to RS-422/485 Converter

485DRCi

SPECIFICATIONS

SERIAL TECHNOLOGY	
Data Rate	1.2 to 115.2 kbps
RS-232	
Connector	DB9 female (DCE)
Signals	TD, RD, GND
RS-422/485	
Connector	Removable terminal block, 28 to 14 AWG
RS-485, 2-wire	Data A(-), Data B(+), GND
RS-422/485, 4-wire	TDA(-), TDB(+), RDA (-), RDB(+), GND
ISOLATION	
Rating	2,000 V
Lines Protected	3-way (input, output, power lines)
Method	Optical
SURGE SUPPRESSION	
Lines Protected	Data lines
Rating	600W peak power dissipation
Clamping/Response Time	< 1 pico-second
INDUSTRIAL BUS	
Modbus	ASCII/RTU
DH-485	Allen-Bradley® Data Highway 485 (DH-485)
POWER	
Connector	Removable terminal block, 28 to 14 AWG
Voltage	10-48 VDC
Consumption	960 mW
Source	External
MECHANICAL	
LED Indicators	Transmit, Receive, and Power
Dimensions	11.4 x 3.3 x 12.4 cm (4.5 x 1.3 x 4.9 in)
Enclosure	35mm DIN mount, plastic, IP30
Weight	204.12 g (0.45 lb)

ENVIRONMENTAL	
Operating Temperature	-40 to +80 °C (-40 to +176 °F)
Storage Temperature	-40 to +85 °C (-40 to +185 °F)
Operating Humidity	0 to 95% non-condensing
MTBF	254617 hours
MTBF Calculation Method	Parts Count Reliability Prediction
CLASS 1/DIVISION 2 WIRING	
Type	Solid copper only
Size	28 to 14 AWG
Temperature	105 °C (221 °F) minimum
Terminal Torque	0.5 Nm (Newton-meters)

APPROVALS / CERTIFICATIONS - 485DRCI

cUL 508, File Number: E222870 (C1 D2 E245458)

FCC Part 15, EN 55022: 2010 + AC Class B Emissions

CE

EN 61000-6-1: Generic Standards for Residential, Commercial and Light-Industrial Environments

EN 61000-4-2: Electro-Static Discharge (ESD)
EN 61000-4-3: +A2 Radiated Field Immunity
EN 61000-4-4: Electrical Fast Transients-Burst Immunity
EN 61000-4-6: Conducted Immunity
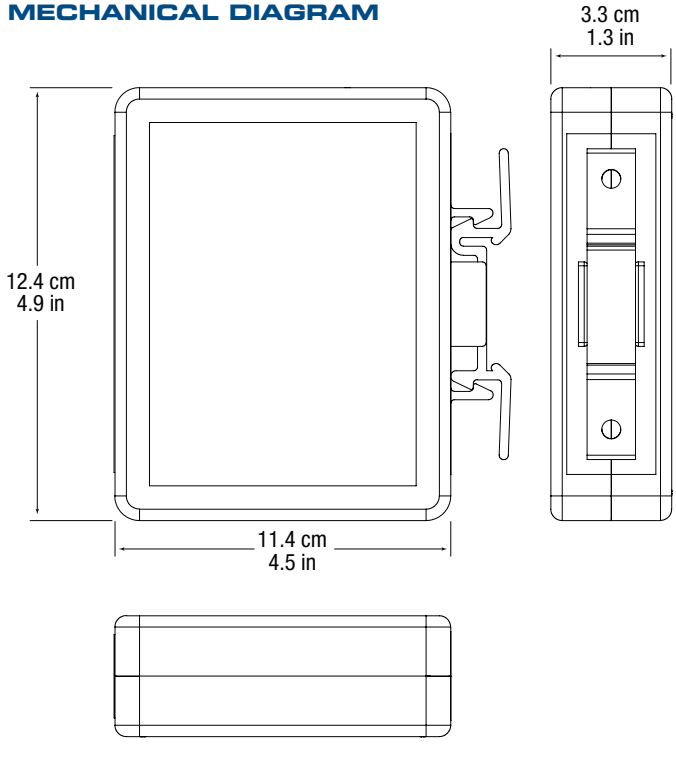
MECHANICAL DIAGRAM